08/04/2005 Water Pump - Remove (RENR9218-14)

SMCS - 1361

i02301490

Removal Procedure

PCP-00022950
2025/12/29
03:55:33+07:00
RENR9218
© 2025 Caterpillar Inc.

NOTICE

Keep all parts clean from contaminants.

Contaminants may cause rapid wear and shortened component life.

NOTICE

Care must be taken to ensure that fluids are contained during performance of inspection, maintenance, testing, adjusting, and repair of the product. Be prepared to collect the fluid with suitable containers before opening any compartment or disassembling any component containing fluids.

Refer to Special Publication, PERJ1017, "Dealer Service Tool Catalog" for tools and supplies suitable to collect and contain fluids on Cat® products.

Dispose of all fluids according to local regulations and mandates.

1. Remove the drive belt from the engine.
2. Drain the coolant from the cooling system into a suitable container for storage or disposal. Refer to Operation and Maintenance Manual, "Cooling System Coolant - Change".

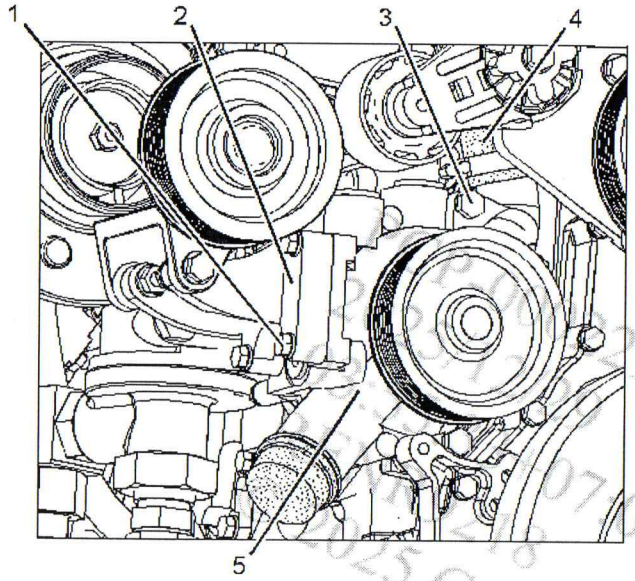

Illustration 1 g01152576

3. Remove bolts (1) and support bracket (2).
4. Disconnect hose (4).
5. Remove bolts (3) and water pump (5).

PCP-00022950
2025/12/29
03:55:12+07:00
i02301490
© 2025 Caterpillar Inc.

SMCS - 1361

i02301545

Installation Procedure

PCP-00022950
2025/12/29
03:58:24+07:00
RENR9218
© 2025 Caterpillar Inc.

NOTICE

Keep all parts clean from contaminants.

Contaminants may cause rapid wear and shortened component life.

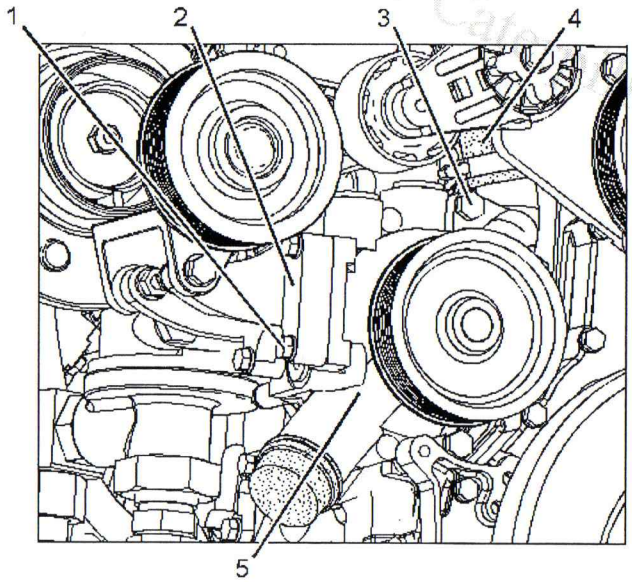

Illustration 1 g01152576

1. Position water pump (5) on the front of the engine. Install bolts (3).
2. Connect hose (4).
3. Position support bracket (2) and install bolts (1).

4. Fill the cooling system. Refer to Operation and Maintenance Manual, "Cooling Sy Coolant - Change".
5. Install the drive belt on the engine.

PCP-00022950
2025/12/29
03:58:21+07:00
i02301545
© 2025 Caterpillar Inc.

Trakindo CAT

Nomor Formulir / *Form Number*	SHE.SHE.FRM.005.R04

ANALISIS LINGKUNGAN KESELAMATAN KERJA / *JOB SAFETY ENVIRONMENT ANALYSIS*

Pekerjaan / *Task*	RI Water Pump Engine C7	Nomor JSEA / *JSEA Number*		Halaman / *Page*	2	Dari / *Of*	2

Tanggal Pembuatan JSEA / *Date of JSEA*	29 / 12 / 25	Departemen / *Dept*	Service	Tempat Kerja / *Work Location*	Workshop TAB

Disusun Oleh / *Compiled By*	Bahril	TTD / *Sign*		Review Oleh / *Reviewed By*		TTD / *Sign*		Atasan / *Superior*		TTD / *Sign*	

Apakah Anda sudah terlatih untuk melakukan pekerjaan ini ? / *Are you properly trained to complete these task ?* ☐ Ya / *Yes* ☐ Tidak / *No*

Apa yang Anda perlukan untuk memastikan bahwa pekerjaan selesai tanpa adanya kecelakaan kerja ? / *What do you need to ensure this job is completed incident free ?*

Tools yang digunakan sudah sesuai dengan Manual

Siapa yang bertanggung jawab untuk menghentikan pekerjaan jika terjadi perubahan pekerjaan atau gangguan kondisi lingkungan kerja ? / *Who is responsible for Stop Work Authority if change job or workplace distraction could ?*

ABCD-1 (Technician Leader) / Mr. X (Customer)

Apakah Anda memerlukan peralatan LOTO ? / *Are you need LOTO Equipments ?* ☑ Ya / *Yes* ☐ Tidak / *No*

Apakah Anda mengetahui ERP/MERP dari pekerjaan yang sedang dilakukan? ☑ Ya / *Yes* ☐ Tidak / *No* ***Jika tidak, silahkan tambahkan dalam urutan langkah tugas diawal***

Kondisi Lingkungan / *Environmental Conditions*	Cuaca / *Weather*		Medan / *Terrain*	

Pengendalian Sumber Bahaya / *Hazardous Energy Control*					
	☐	Listrik / *Electrical*	☑	Gravitasi (Benda jatuh,tertimpa) / *Gravitation (Falling objects, struck down)*	☐ Pneumatik / *Pneumatic*
	☐	Hidraulik / *Hydraulic*	☑	Mekanis / *Mechanical*	☐ Panas / *Thermal*

APD yang diperlukan / *Required PPE*					
	☑	Helm / *Safety Helm*	☐	Pelindung Muka / *Face shield*	☑ Kacamata / *Safety Glass*
	☑	Sarung Tangan / *Hand Gloves*	☐	Pelindung Pernafasan / *Respiratory Protection*	☐ Perlindungan Kejatuhan / *Fall Protection*
	☑	Sepatu / *Safety Shoes*	☐	Pelindung Telinga / *Hearing Protection*	☐ Lain-Lain / *Other .....*

Hal yang perlu dipertimbangan dalam mengidentifikasi bahaya / *These to consider in identify hazards* :

1. **Bahaya Keselamatan** : Kondisi tidak aman yang dapat menyebabkan injury atau kematian seperti terjepit, terpeleset/terjatuh, tertimpa dll.
   Safety Hazard : unsafe conditions that can cause injury or even death, such as spill/falls, pinch point, struck by, etc.
2. **Bahaya Fisik** : Listrik, Api/ledakan, Kebisingan, Radiasi, Panas, Tekanan, Terjepit, Tersandung/Terjatuh, Tertimpa, Getaran.
   Physical Hazards : Electrical, Fire/Explosion, Noise, Radiations, Thermal, Pressure, Pinch Point, Slips/Falls, Struck by, Vibration.
3. **Bahaya Kimia** : Terhirup, terkena kulit, injeksi, tertelan, terserap.
   Chemical Hazards : Inhalation, skin contact, injection, ingestion, absorption.
4. **Bahaya Biologi** : Patogen yang ditularkan melalui darah, jamur, tanaman/serangga/hewan.
   Biological Hazards : bloodbone pathogens, mold, Plant/Insect/Animals
5. **Bahaya Ergonomi** : Gerakan berulang-ulang, beban yang berlebihan, Postur Janggal, Durasi kerja, Desain area kerja.
   Ergonomic Hazards : Repetitions, Forcefull extention, Awkward Posture, Duration , Work area desain.
6. **Bahaya Organisasi** : stres atau bahaya terkait dengan masalah tempat kerja yang menyebabkan efek jangka panjang atau pendek, beban kerja yang berat dan kekerasan ditempat kerja.
   Organizational hazards: stressors or hazards associated with workplace issues that cause long or short term effects heavy workloads, stressful interactions and workplaces violence.

No	Urutan Dasar Langkah Tugas / *Job Steps* (* Maksimum 15 Langkah / *Maximum 15 Steps*)	Bahaya Yang Terkait / *Potential Hazard(s)*	Tindakan Perbaikan / *Recommended Action*
1	Walk Around Inspaction	1.1 Kaki Tersandung	1.1.1 Perhatikan area
			1.1.2 Pindahkan barang yg berpotensi
			1.1.3 Memakai safety shoes
2	Pre Para area & Tools	2.1 Kaki Terjepit	2.1.1 Hindari titik Jepit
			2.1.2 Gunakan safety shoes
		2.2 terjepit saat pengangkatan	2.2.1 Perhatikan genggaman tangan
			2.2.2 Hindari titik bahaya
			2.2.3 Pakai safety gloves
		2.3 tertimpa saat melakukan JBL	2.3.1 Periksa kapasitas beban crane
			2.3.2 Periksa equipment Lifting
3	Doing Remove water Pump	3.1 Jari terjepit saat pelepasan	3.1.1 Hindari titik Jepit
			3.1.2 Berhati-hati saat penggunaan tools
			3.1.3 Memakai safety gloves
		3.2 Tangan tergores	3.2.1 Menghindari komponen tajam
			3.2.2 Memakai safety gloves
		3.3 Kaki Tertimpa	3.3.1 Pastikan ada penyangga sebelum mapas
			3.3.2 Pakai safety shoes
4	Doing Install water Pump	4.1 Tangan Terjepit saat	4.1.1 Hindari titik Jepit

Bagian Dari / *Part Of*	SHE.SHE.SOP.003.R04

Trakindo CAT

Nomor Formulir / *Form Number*	SHE.SHE.FRM.005.R03

ANALISIS LINGKUNGAN KESELAMATAN KERJA / JOB SAFETY ENVIRONMENT ANALYSIS

Pekerjaan / *Task*	RJ Water Pump Engine C1	Nomor JSEA / *JSEA Number*		Halaman / *Page*	2	Dari / *Of*	2

No	Urutan Dasar Langkah Tugas / *Job Steps* (* Maksimum 15 Langkah / Maximum 15 Steps)	Bahaya Yang Terkait / *Potential Hazard(s)*	Tindakan Perbaikan / *Recommended Action*
		Pembuatan Gasket	4.1.1 Menggunakan safety gloves
		4.2 Tangan terjepit saat pemasangan komponen	4.2.1 Menghindari titik jepit
			4.2.2 Menggunakan safety gloves
5	House keeping	5.1 Terpapar oli berceceran	5.1.1 Bersihkan oil
			5.1.2 Hati-hati saat melangka
		5.2 Kaki terjepit roda toolbox	5.2.1 Hindari titik jepit roda
			5.2.2 Memakai safety shoes
		5.3 Kaki tertimpa tools	5.3.1 Perhatikan penempatan tools
			5.3.2 Gunakan safety shoes

Bukti sosialisasi / *Evidence of socialization*:

No	Nama / *Name*	TTD / *Sign*	No	Nama / Name	TTD / Sign	No	Nama / Name	TTD / Sign
1								
2								
3								
4								
5								